aquabrass

san remo 8016

widespread lavatory faucet

FEATURES

Solid brass construction
Aerated water flow
Press pop-up drain with overflow #abdr00699
Ceramic cartridge # hot ABCA30911 cold ABCA30921
1/2" connection

FINISHES

Standard
polished chrome (pc)
brushed nickel (bn)
Custom
19 custom finishes available
(ask your local Aquabrass authorized dealer for details)

WARRANTY

Residential: Limited lifetime warranty to original purchaser
Commercial: Two years warranty
(Complete warranty available at www.aquabrass.com/warranty)

SPECS AT LARGE

Overall spout projection: 7 7/16"
CC spout projection: 6"
Total faucet height: 6"
Flow rate: 2 gpm
Mounting hole: 1 3/8"
Counter depth: 1 3/8"

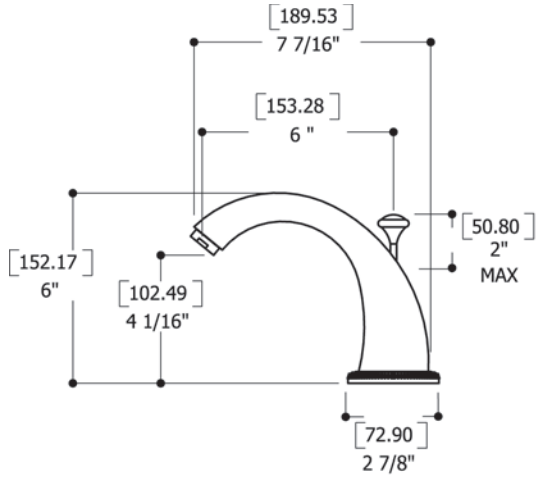

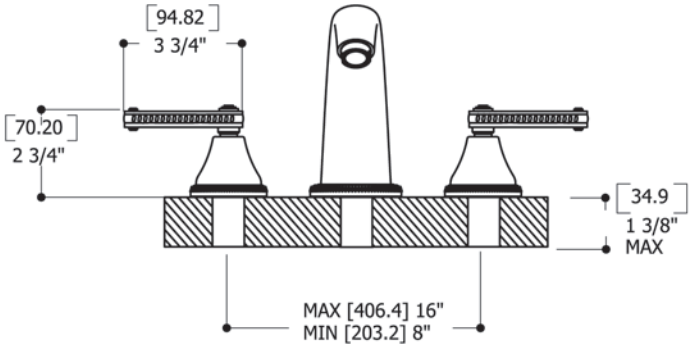

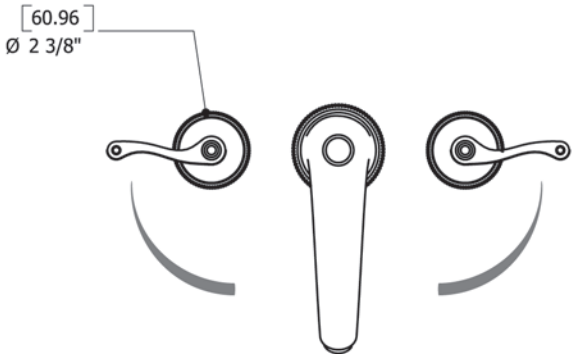

Products and specifications shown are subject to change without notice. Please contact our technical support at tech@aquabrass.com for any further queries, replacement parts requests etc.